vossloh
North America

Technical Sheets

vossloh
North America

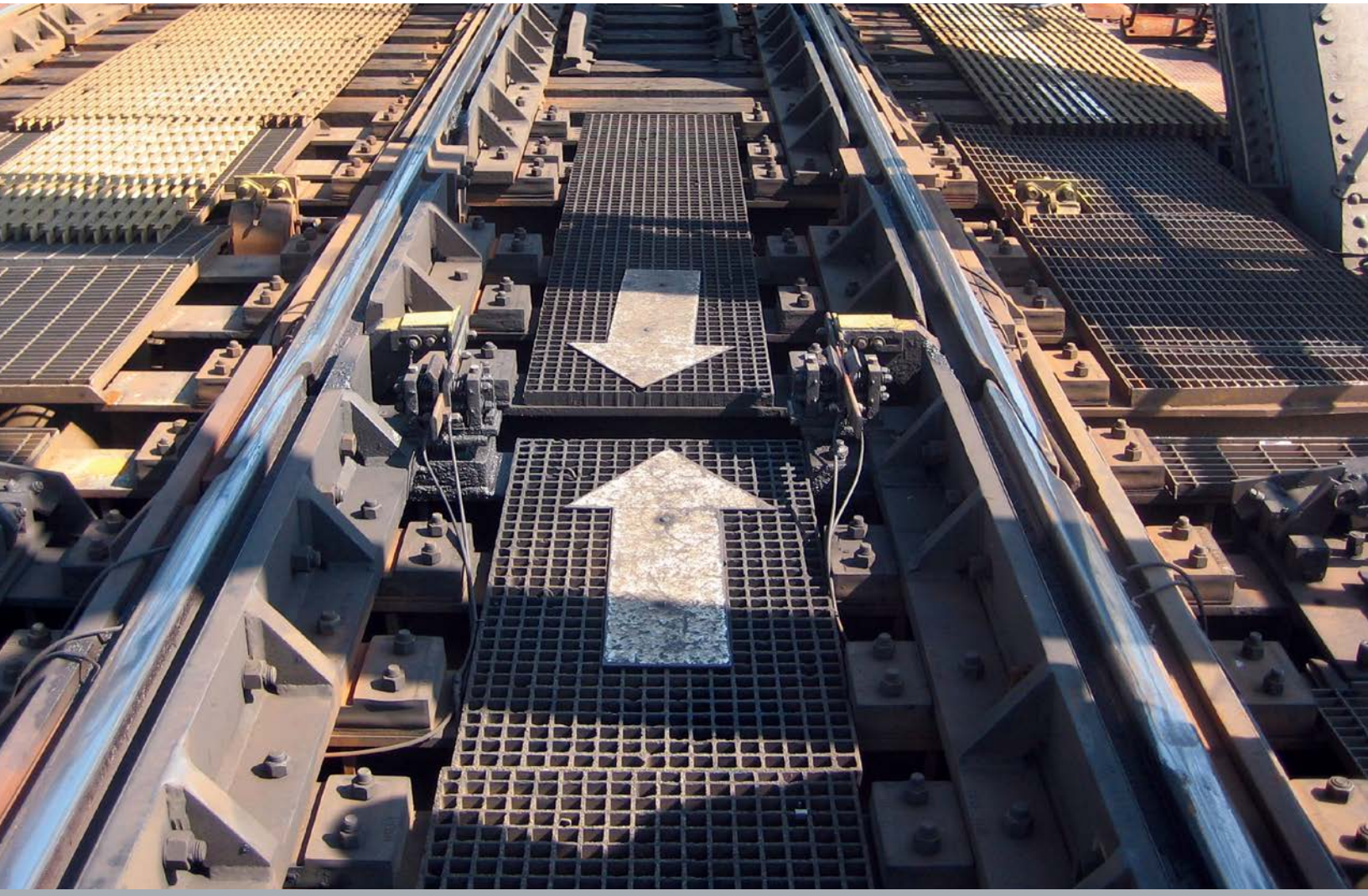

Bridge Joints and Expansion Rail Joints

Bridge Joints and Expansion Rail Joints

Expansion rail joints are recommended to protect bridge joints, crossings and other critical track work assemblies. Assemblies include both solid manganese designs and all rail designs.

Easer Rail Miter Joint Design
Light Traffic – Slower Speeds

All Rail Miter Joint Designs
Light Traffic – Moderate Speeds

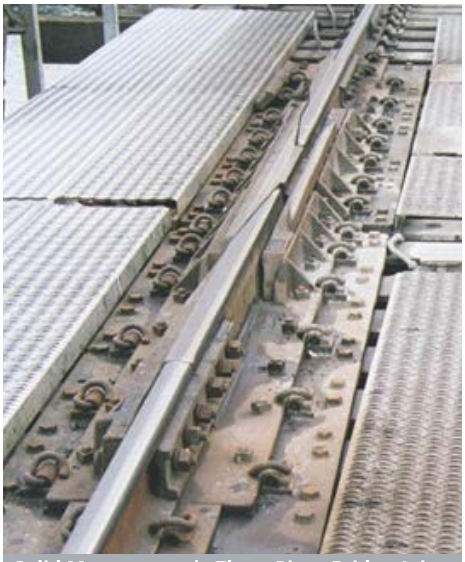

Solid Manganese | Three Piece Bridge Joints
Heavy Traffic – Normal Speeds

Features

- **Various bridge joint designs are available. All are designed and constructed utilizing durable components and premium grade material.**
- **Available in two- and three-piece manganese designs, along with various miter rail assemblies.**
- **The designs can be adapted and configured to suit specific bridge site conditions, requirements and restrictions.**
- **Proven performance providing reliable operation. Various expansion joint designs are also available in manganese and all rail configurations.**
- **All providing safe and reliable expansion protection against serious and costly damage to bridge joints and other adjacent track work assemblies.**

Patent Pending

Headquarters location:

6917 Bessemer Avenue
Cleveland, OH 44127
Phone: 216.641.4000
Fax: 216.641.0882

Headquarters main mailing address:

P.O. Box 603160
Cleveland, OH 44103
Phone: 216.641.4000
Fax: 216.641.0882

Manufacturing facility locations:

6900 Bessemer Avenue
Cleveland, OH 44127
Phone: 216.641.4000
Fax: 216.641.0882

7000 Central Avenue
Cleveland, OH 44104
Phone: 216.881.8800
Fax: 216.881.6910

391 Mallory Avenue
Memphis, TN 38109
Phone: 901.948.7000
Fax: 901.948.7872

5662 Leesport Avenue
Reading, PA 19605
Phone: 800.554.0554
Fax: 610.926.2897

Vossloh North America

clevelandtrack.com
vossloh-north-america.com
info@vossloh-north-america.com

vossloh
North America

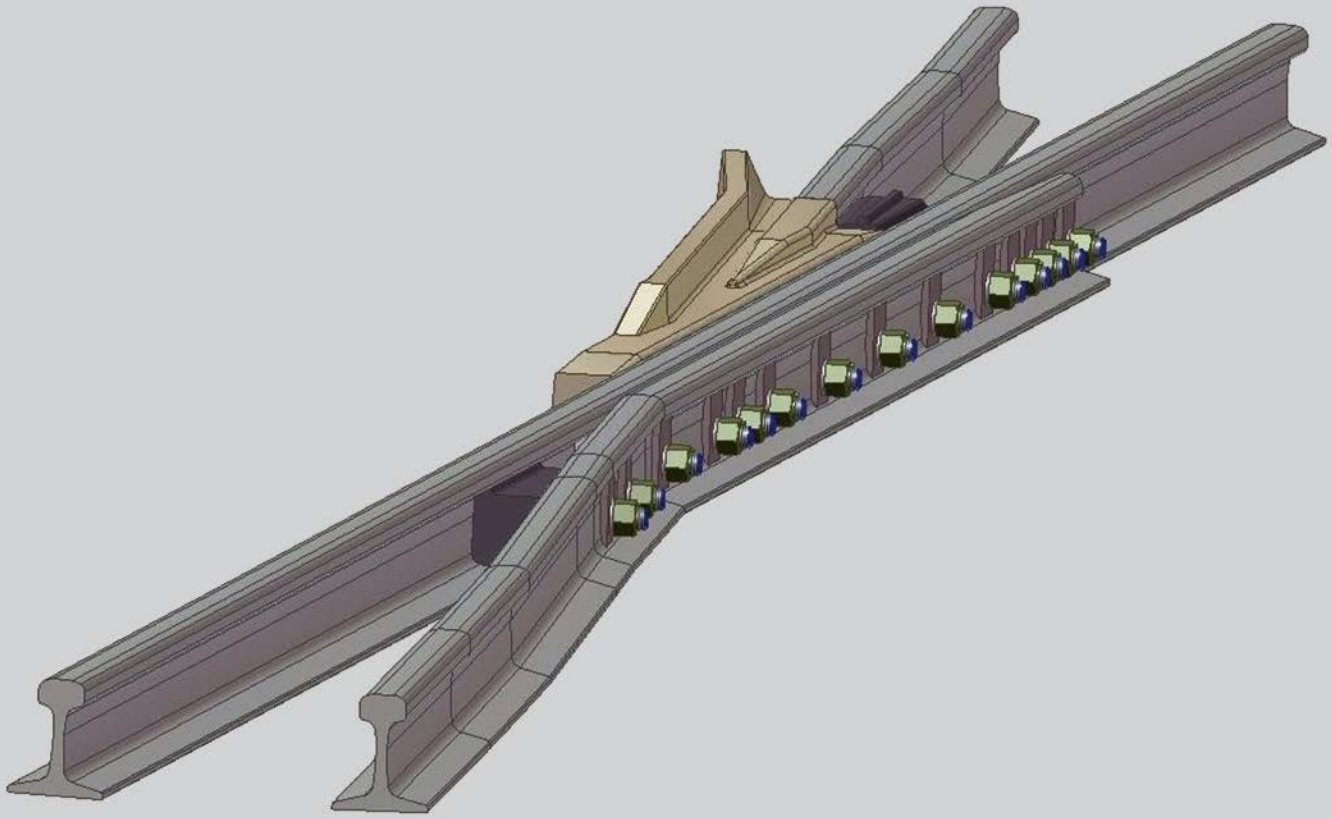

EL Frog

EL Frog

The new Vossloh "EL Frog" design provides the required ramping by means of external vertical bends in the leg of the wing rail and in the heel rail. The standard lengths of the ramping allows for safe operation at speeds currently within FRA restrictions. Since the ramping is external to the frog body, they can easily be lengthened to offer safe operation at higher speeds as allowed.

Features

This design offers features that improve overall performance and make it a better choice for installation at more flange-bearing locations. The straight mainline running rail is not only unbroken, but it is also canted at the normal 1:40 angle to allow for ease of installation and providing a smooth, continuous wheel contact path throughout the mainline side. The one-piece manganese design provides a level flange-bearing guarded wheel path through the body of the frog on the turnout side.

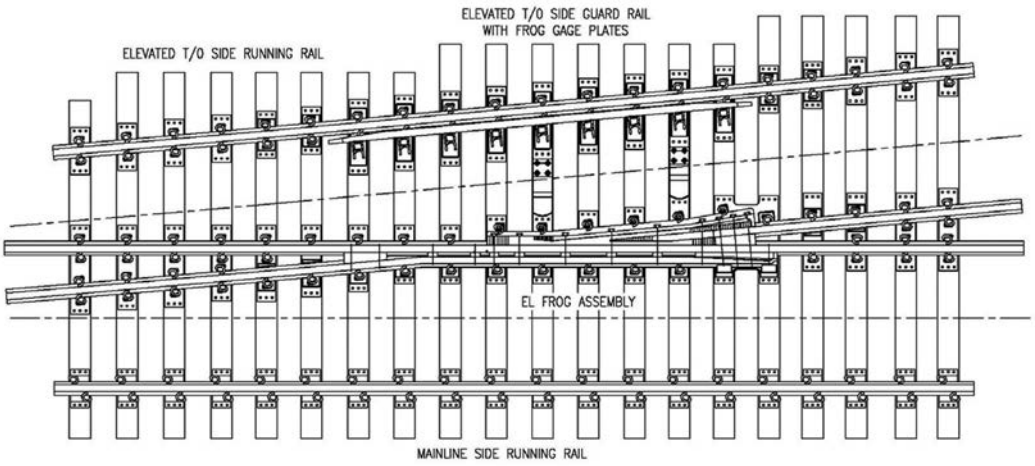

EL Frog Assembly

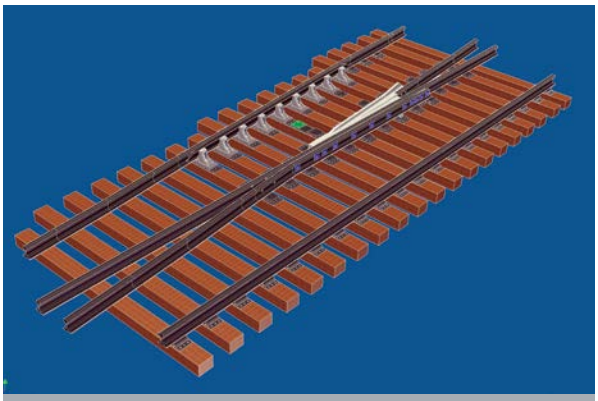

EL Frog Panel

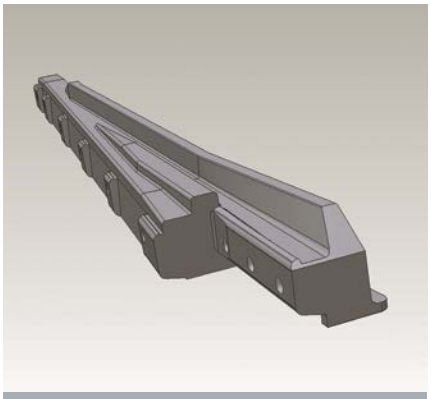

EL Frog Casting

Patent Pending

Headquarters location:

6917 Bessemer Avenue
Cleveland, OH 44127
Phone: 216.641.4000
Fax: 216.641.0882

Headquarters main mailing address:

P.O. Box 603160
Cleveland, OH 44103
Phone: 216.641.4000
Fax: 216.641.0882

Manufacturing facility locations:

6900 Bessemer Avenue
Cleveland, OH 44127
Phone: 216.641.4000
Fax: 216.641.0882

7000 Central Avenue
Cleveland, OH 44104
Phone: 216.881.8800
Fax: 216.881.6910

391 Mallory Avenue
Memphis, TN 38109
Phone: 901.948.7000
Fax: 901.948.7872

5662 Leesport Avenue
Reading, PA 19605
Phone: 800.554.0554
Fax: 610.926.2897

Vossloh North America

clevelandtrack.com
vossloh-north-america.com
info@vossloh-north-america.com

vossloh
North America

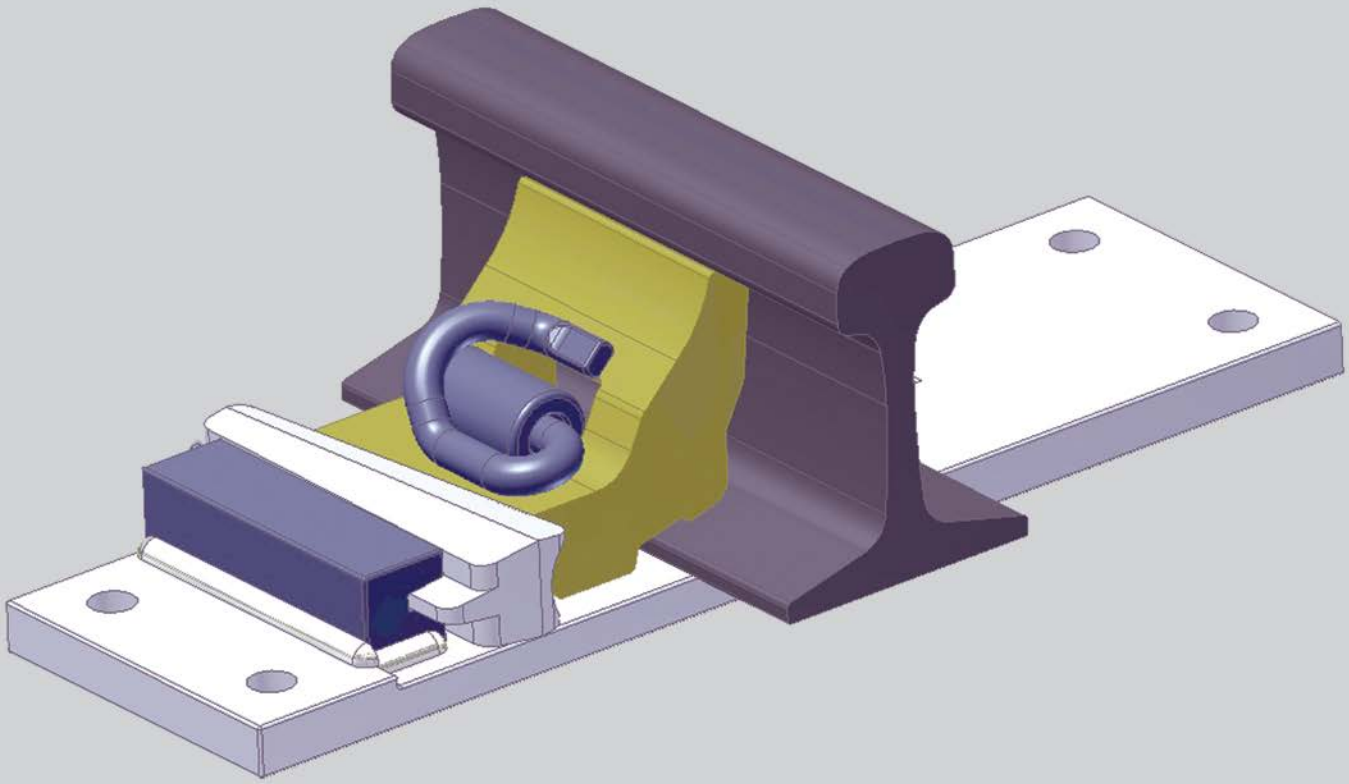

"EVR" Adjustable Rail Brace System

U.S. Patent No 6,517,008

"EVR" Adjustable Rail Brace System

This Vossloh Adjustable Rail Brace System design incorporates several new and unique features that provide improved in-track performance and panel handling stability over all other existing rail brace designs.

Features

The key feature of the "EVR" Rail Brace is that it allows the clamping power of the spring clip to be maximized as the spring clip loading is applied directly to both the front and back of the brace. This secures the brace up against the stock rail and down against the switch brace plate.

Another key feature is that the "EVR" brace is designed with a central rectangular opening to fit over the top of the welded clip housing. This provides two very important benefits over all other existing brace designs:

- **The clip itself is positioned closer to the stock rail.**
- **The clip housing prevents the brace from backing out longitudinally.**

Installation Instructions

1. Position plate on tie with stock rail in position in rail seat and with rail base up against the riser.
2. Place brace in position over the top of the clip housing and slide brace toward stock rail to engage fit.
3. Insert wedge and tap in place to draw brace snugly up against the stock rail, do not overdrive.
4. Drive the elastic clip into clip housing to secure the brace in place and tap the wedge snug if required.
5 Apply retention pin to hole at far end of the wedge for final added security.

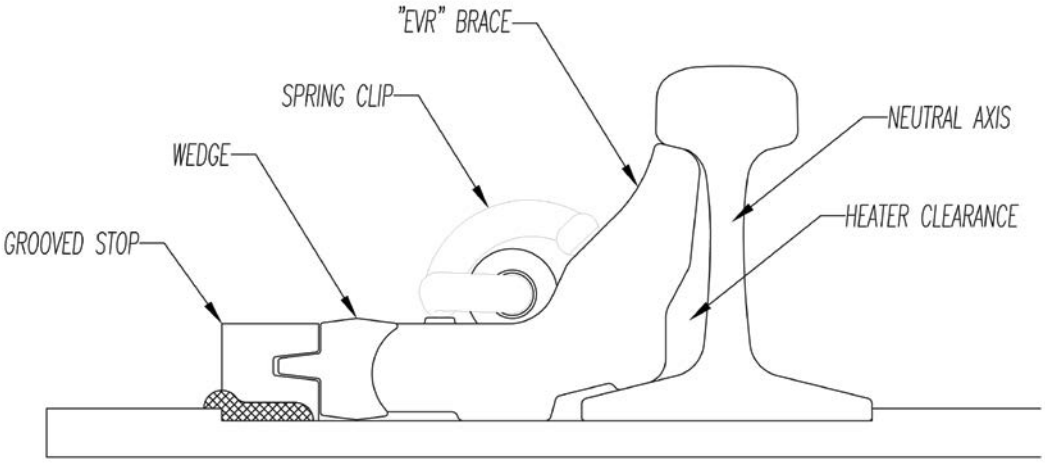

Headquarters location:

6917 Bessemer Avenue
Cleveland, OH 44127
Phone: 216.641.4000
Fax: 216.641.0882

Headquarters main mailing address:

P.O. Box 603160
Cleveland, OH 44103
Phone: 216.641.4000
Fax: 216.641.0882

Manufacturing facility locations:

6900 Bessemer Avenue
Cleveland, OH 44127
Phone: 216.641.4000
Fax: 216.641.0882

7000 Central Avenue
Cleveland, OH 44104
Phone: 216.881.8800
Fax: 216.881.6910

391 Mallory Avenue
Memphis, TN 38109
Phone: 901.948.7000
Fax: 901.948.7872

5662 Leesport Avenue
Reading, PA 19605
Phone: 800.554.0554
Fax: 610.926.2897

Vossloh North America

clevelandtrack.com
vossloh-north-america.com
info@vossloh-north-america.com

vossloh
North America

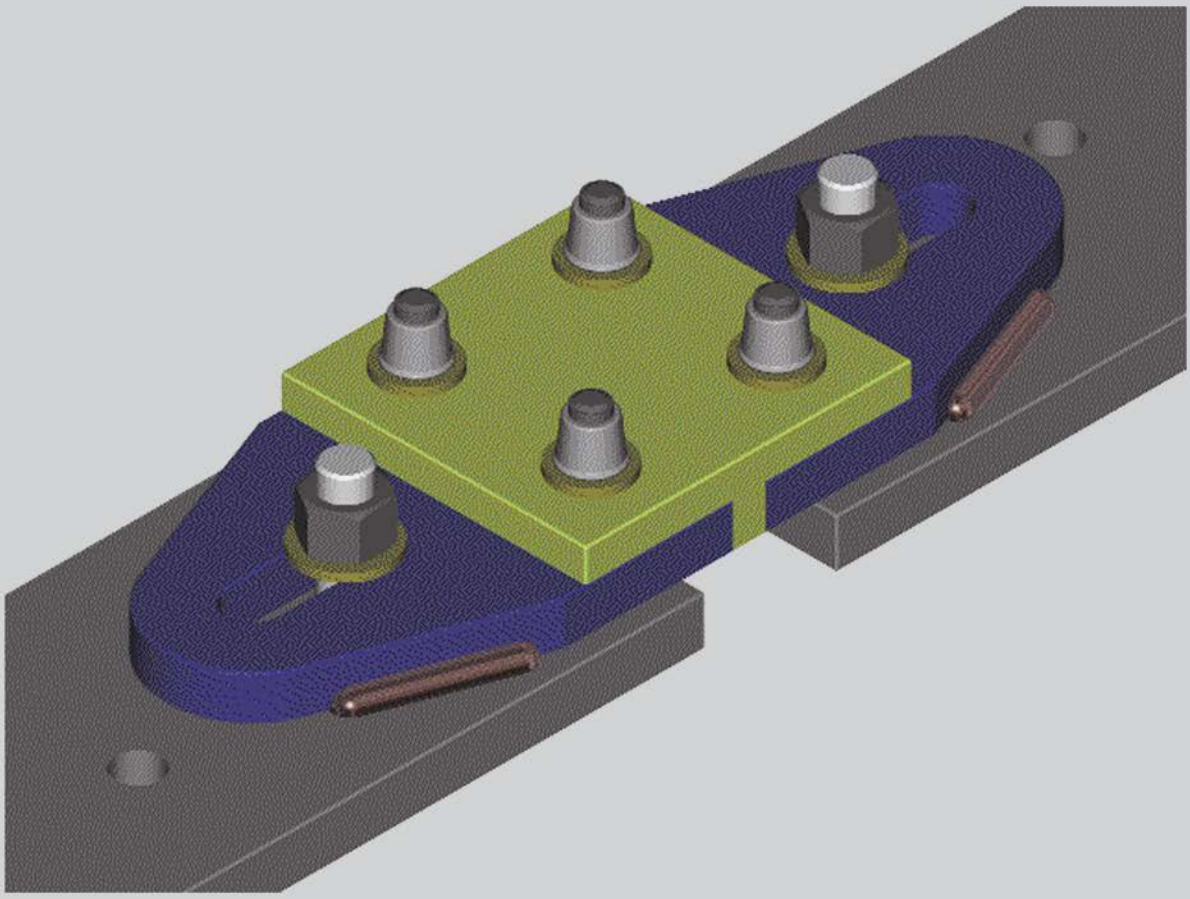

Universal Swivel-Slide Insulated Gage Plate

U.S. Patent No. 6,997,419

Universal Swivel-Slide Insulated Gage Plate

This assembly is configured to provide for both lateral and angular adjustment. This allows the plate to fit into any existing or new switch alignment, regardless of switch angle, curve, hand or tie spacing. Once set to the required angle and spacing, the swivel-slide plates can be securely welded to the gage plate ends.

The new gage plate is designed utilizing the current state-of-the-art standard insulation assembly materials and includes the Common Standard Style Lifting Hook for safety and ease of handling. The rail seat ends can be adapted to allow for application and installation of any of the variety of switch brace assemblies that are available.

Features

This new universal "handless" design can dramatically reduce inventory requirements. It is:

- **Adjusted to fit all existing switch alignments with any tie spacing.**
- **Easily adapted to fit any new or special switch alignments.**
- **Ideal for emergency stock, switch upgrades, temporary switches and derailment rebuilds.**

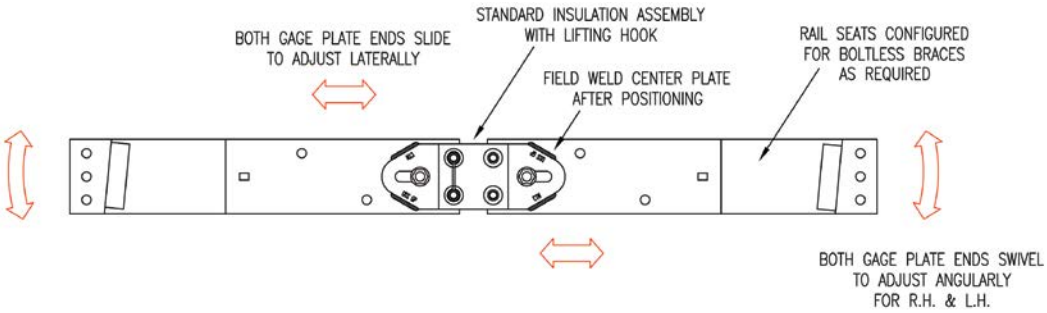

Headquarters location:

6917 Bessemer Avenue
Cleveland, OH 44127
Phone: 216.641.4000
Fax: 216.641.0882

Headquarters main mailing address:

P.O. Box 603160
Cleveland, OH 44103
Phone: 216.641.4000
Fax: 216.641.0882

Manufacturing facility locations:

6900 Bessemer Avenue
Cleveland, OH 44127
Phone: 216.641.4000
Fax: 216.641.0882

7000 Central Avenue
Cleveland, OH 44104
Phone: 216.881.8800
Fax: 216.881.6910

391 Mallory Avenue
Memphis, TN 38109
Phone: 901.948.7000
Fax: 901.948.7872

5662 Leesport Avenue
Reading, PA 19605
Phone: 800.554.0554
Fax: 610.926.2897

Vossloh North America

clevelandtrack.com
vossloh-north-america.com
info@vossloh-north-america.com

vossloh
North America

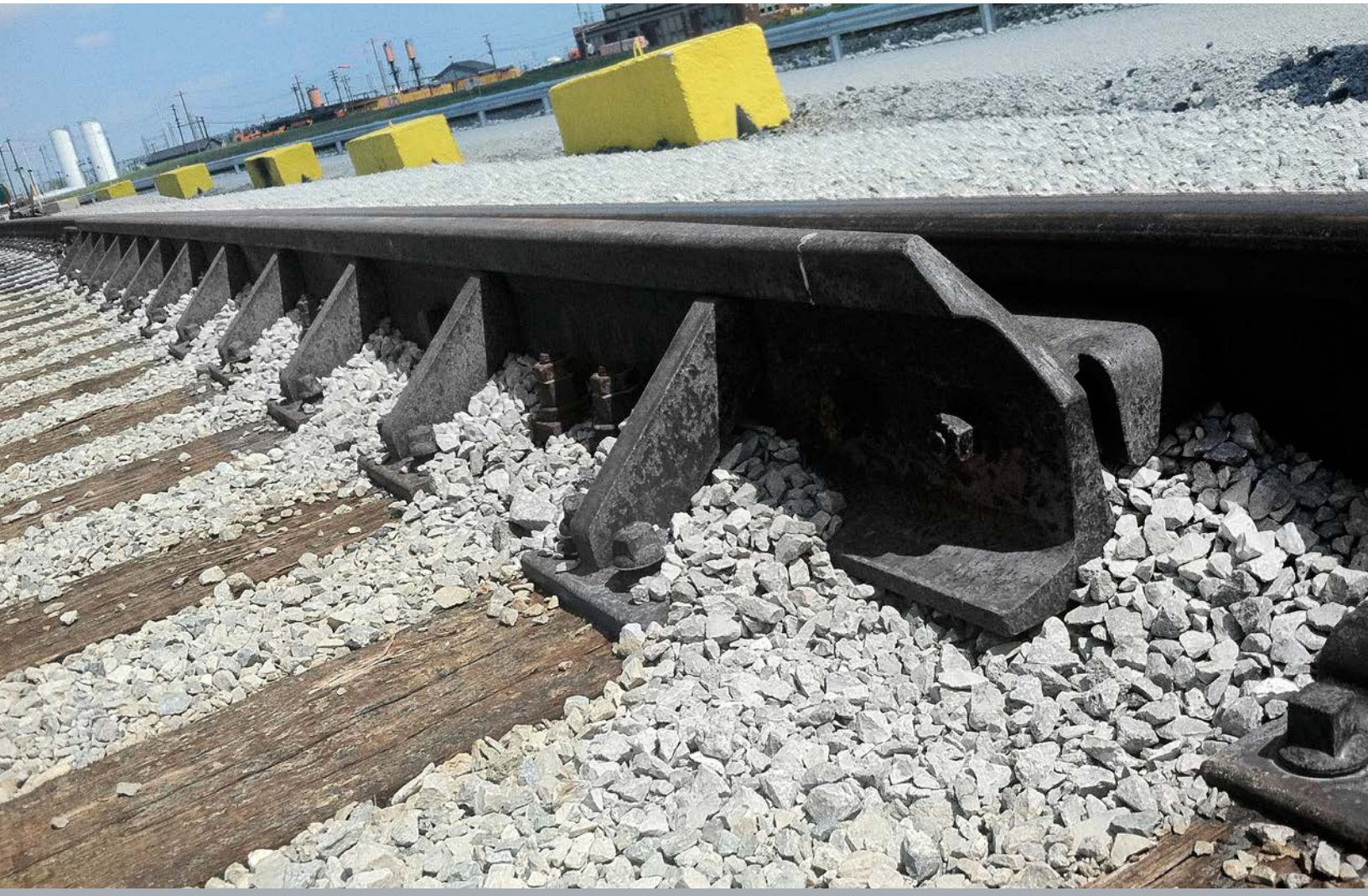

Hook Flange Guard Rail

Hook Flange Guard Rail

Vossloh Hook Flange Guard Rails are utilized in a number of configurations and are provided in various lengths, with a variety of plate designs to suit many different applications in both yard and mainline installations.

Features

- **Unitized construction significantly reduces installation time compared to other designs.**
- **Fixed tie plate design limits tie movement helping to stabilize the frog section of the turnout, thus maintaining line and gage enhancing frog service life.**
- **Standard lengths offered include: 9'-0", 13'-0", 15'-0", 16'-6", 19'-6", 20'-0"& 26-0".**

Benefits

- **The special rolled rail steel guard provides improved lateral stability with longer life-cycles than other designs.**
- **Rugged, durable construction with a long history of proven reliability.**
- **Optional designs can include adjustable flangeway, variable tie spacing options and elastic fastener applications.**
- **Various design options can be configured to suit heavy, medium and light traffic conditions.**

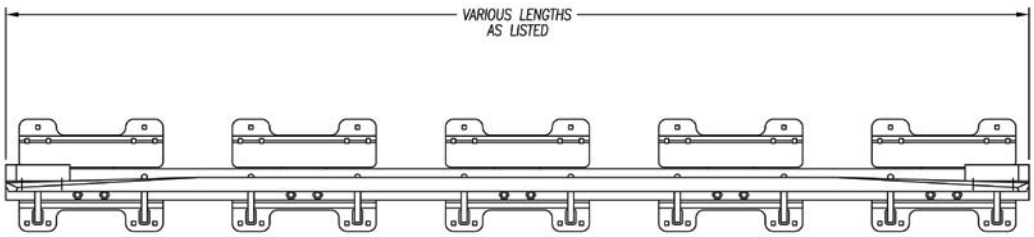

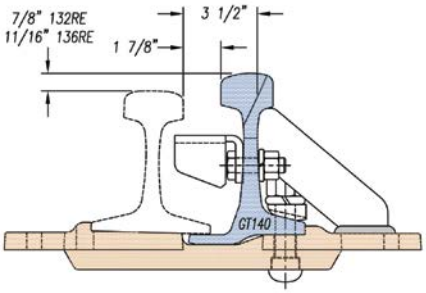

END VIEW

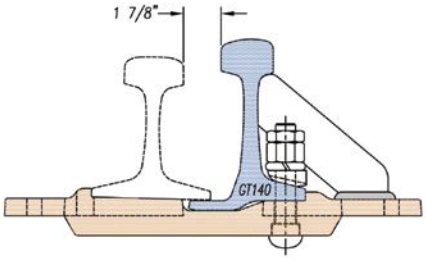

SECTION VIEW

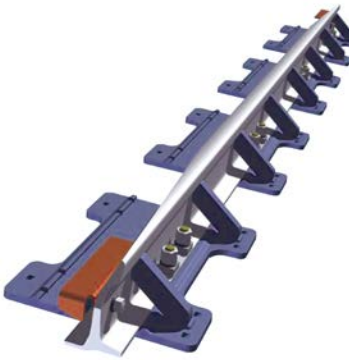

vossloh-north-america.com

Headquarters location:

6917 Bessemer Avenue
Cleveland, OH 44127
Phone: 216.641.4000
Fax: 216.641.0882

Headquarters main mailing address:

P.O. Box 603160
Cleveland, OH 44103
Phone: 216.641.4000
Fax: 216.641.0882

Manufacturing facility locations:

6900 Bessemer Avenue
Cleveland, OH 44127
Phone: 216.641.4000
Fax: 216.641.0882

7000 Central Avenue
Cleveland, OH 44104
Phone: 216.881.8800
Fax: 216.881.6910

391 Mallory Avenue
Memphis, TN 38109
Phone: 901.948.7000
Fax: 901.948.7872

5662 Leesport Avenue
Reading, PA 19605
Phone: 800.554.0554
Fax: 610.926.2897

Vossloh North America

clevelandtrack.com
vossloh-north-america.com
info@vossloh-north-america.com

vossloh
North America

Insulated Extended Machine Gage Plates

Insulated Extended Machine Gage Plates

Vossloh Insulated Extended Machine Gage Plate Sets are custom designed to RH or LH switches for various rail sections, switch lengths, specific tie spacing, machine alignment and orientation, and required plate dimensions to suit the customer's individual requirements. These can be assembled and pre-plated to headblock ties for shipment.

Features and Benefits

Vossloh has worked closely with Class 1 Signal Department personnel to develop a series of Insulated Extended Machine Gage Plate Sets adapted to a variety of mainline and yard applications. These machine gage plates are designed to provide a more secure machine mounting, standardizing signal arrangements and, most importantly, providing for ease of installation during panelization and in the field.

Vossloh Extended Machine Gage Plate Package

The complete Vossloh Extended Machine Gage Plate Package can include ties, plates, tie straps, screwspikes, Zinc plated alloy stud assemblies and switch brace assemblies along with all spring clips and machine mounting fasteners. It can be furnished in a number of different configurations to best suit your individual preferences. The standard package includes the two extended machine plates, but can be configured with three plates as shown in the diagram and with or without ties as preferred.

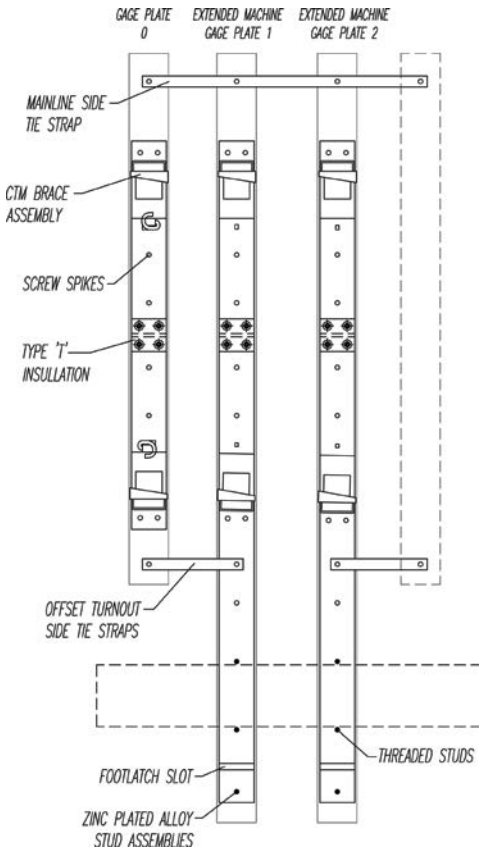

Headquarters location:

6917 Bessemer Avenue
Cleveland, OH 44127
Phone: 216.641.4000
Fax: 216.641.0882

Headquarters main mailing address:

P.O. Box 603160
Cleveland, OH 44103
Phone: 216.641.4000
Fax: 216.641.0882

Manufacturing facility locations:

6900 Bessemer Avenue
Cleveland, OH 44127
Phone: 216.641.4000
Fax: 216.641.0882

7000 Central Avenue
Cleveland, OH 44104
Phone: 216.881.8800
Fax: 216.881.6910

391 Mallory Avenue
Memphis, TN 38109
Phone: 901.948.7000
Fax: 901.948.7872

5662 Leesport Avenue
Reading, PA 19605
Phone: 800.554.0554
Fax: 610.926.2897

Vossloh North America

clevelandtrack.com
vossloh-north-america.com
info@vossloh-north-america.com

vossloh
North America

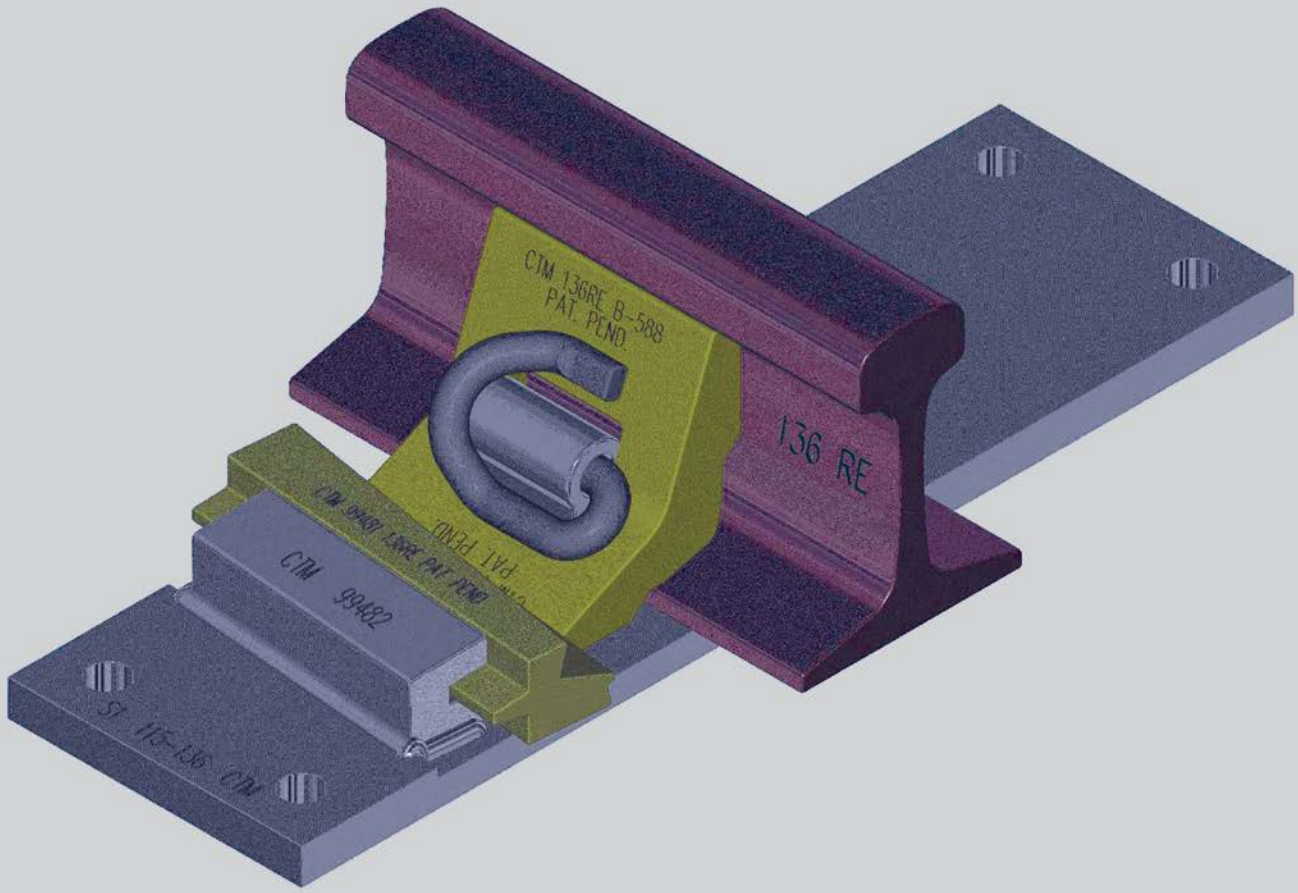

"RAM" Universal Rail Brace Plate System

U.S. Patent No 7,641,128

"RAM" Universal Rail Brace Plate System

A unique brace and plate design that provides for a wide range of installation options, while at the same time, providing improved rail support and long-term performance.

Features

The new Vossloh "RAM" brace plate system incorporates the same key design features as the Vossloh "EVR" brace system that provides improved in-track performance and panel handling stability over other existing rail brace designs. The clip housing is centrally positioned within the brace opening, allowing the clamping force of the spring clip to be maximized as the clip loading is applied directly to the brace both front and back, securing the brace laterally against the stock rail, and down against the rail flange and the plate.

Benefits

The major benefit of the new Vossloh "RAM" Universal Brace Plate System is that it is uniquely designed to accommodate both the mainline rail group and the secondary rail group. The rail brace and wedge are both reversible, and the Universal Master Brace Plate is designed to allow installation on switches with rail sections ranging from 112RE through 141RE.

The new "RAM" brace design also offers some very important additional benefits over all other existing brace designs. The spring clip itself is more effectively positioned closer to the rail and above the neutral axis of the rail increasing holding power. The new "RAM" brace is designed to provide the traditional "under head" and "top of rail flange" contact surfaces for both rail group positions ensuring optimum rail support. The "RAM" brace and wedge castings are both cast with dual rail section lettering to clearly indicate proper assembly orientation of the components, providing ease of installation for both rail groups.

Installation Instructions

1. Position the plate on tie with stock rail in position in the rail seat and with the rail base up against the riser.
2. Place the brace in position down over the top of the clip housing and slide the brace toward the stock rail to engage fit.
3. Insert the wedge and tap it in place to draw the brace up snugly against the stock rail, do not overdrive.
4. Drive the spring clip into the clip housing to secure the brace in place and tap the wedge snug if required.
5. Apply retention pin to hole at far end of the wedge for final added security.

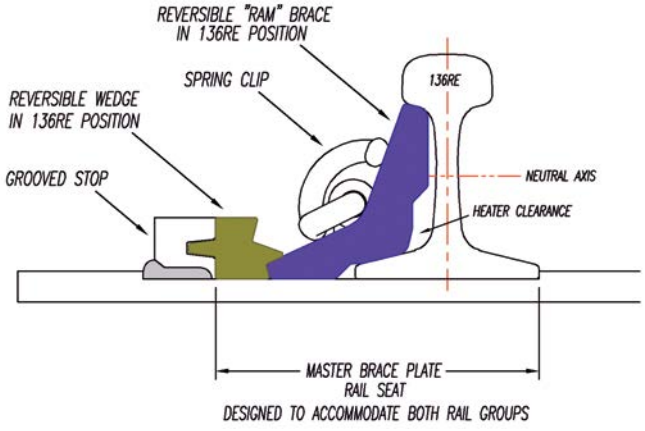

Headquarters location:

6917 Bessemer Avenue
Cleveland, OH 44127
Phone: 216.641.4000
Fax: 216.641.0882

Headquarters main mailing address:

P.O. Box 603160
Cleveland, OH 44103
Phone: 216.641.4000
Fax: 216.641.0882

Manufacturing facility locations:

6900 Bessemer Avenue
Cleveland, OH 44127
Phone: 216.641.4000
Fax: 216.641.0882

7000 Central Avenue
Cleveland, OH 44104
Phone: 216.881.8800
Fax: 216.881.6910

391 Mallory Avenue
Memphis, TN 38109
Phone: 901.948.7000
Fax: 901.948.7872

5662 Leesport Avenue
Reading, PA 19605
Phone: 800.554.0554
Fax: 610.926.2897

Vossloh North America

clevelandtrack.com
vossloh-north-america.com
info@vossloh-north-america.com

vossloh
North America

Adjustable Switch Point Guard

Adjustable Switch Point Guard

Vossloh's Adjustable Switch Point Guard was designed utilizing a durable one-piece cast steel body casting. The arched design not only provides strength to the assembly, but it allows for installation on and over an existing center gage plate, and with clearance for the existing rail brace assembly. Outside plates are pre-set to the industry standard 42" spacing, which provides ease of installation on RH or LH new and existing switches. The guard bar has been raised 5/16", which provides a 50% increase in the true vertical guarding surface area. To reduce the likelihood of wheel climbs, we've eliminated the traditional beveled-end flare. Three top-mounted indexing inserts allow the manganese steel guard bar to be easily adjusted in track without disassembly, providing four 1/8" wear cycles. A reduced flare entry angle provides less radical wheel deflections, thus reducing lateral impact loads. Mounting bolts are H.T. Hex Head 1 3/8" diameter Grade 8, and are factory torqued to 1800 ft./lbs. These are secured with Nord-Lock Washers.

Features

- **Longer overall guard bar length – 8"**
- **Longer flare lengths – each end 4"**
- **Raised guard bar height – 5/16" higher.**
- **Larger diameter mounting bolts – 1 3/8" diameter**
- **More effective fittings – Nord-Lock Washers**
- **Outside handling holes – balanced for safety**

Benefits

- **Improved service life – (4) 1/8" wear cycles**
- **Reduced flare entry angle – 20% reduction**
- **Increased guarding surface area – 50% increase**
- **Improved bolt tightness – 1800 ft / lbs**
- **Ease of installation on switches**
- **Reduction of wheel climbs**

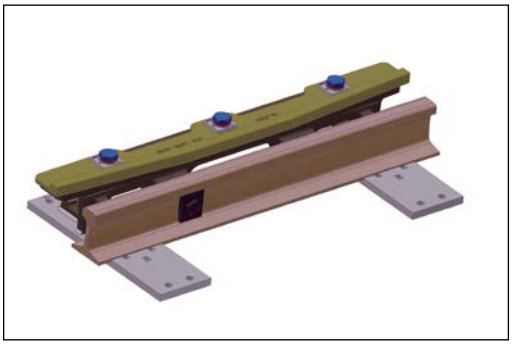

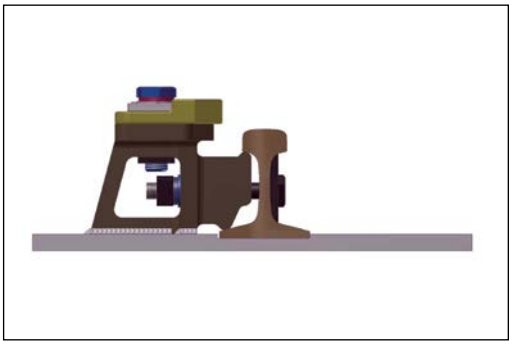

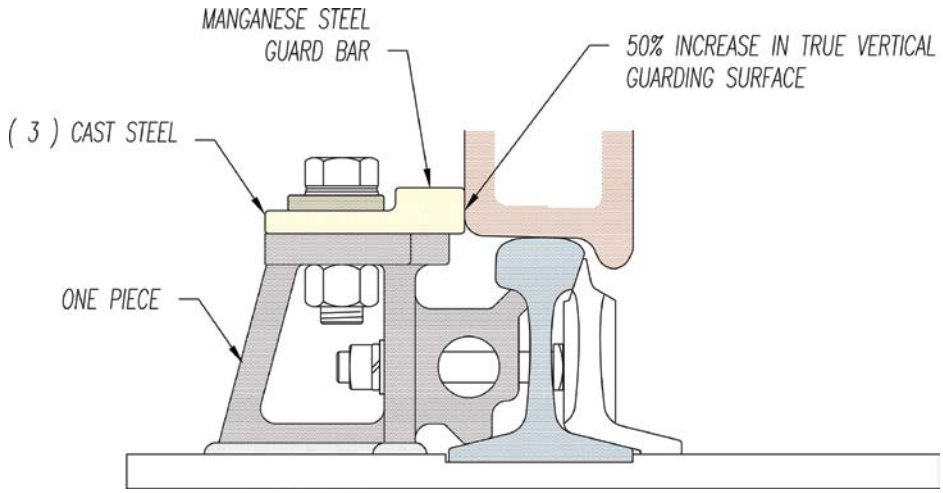

Headquarters location:

6917 Bessemer Avenue
Cleveland, OH 44127
Phone: 216.641.4000
Fax: 216.641.0882

Headquarters main mailing address:

P.O. Box 603160
Cleveland, OH 44103
Phone: 216.641.4000
Fax: 216.641.0882

Manufacturing facility locations:

6900 Bessemer Avenue
Cleveland, OH 44127
Phone: 216.641.4000
Fax: 216.641.0882

7000 Central Avenue
Cleveland, OH 44104
Phone: 216.881.8800
Fax: 216.881.6910

391 Mallory Avenue
Memphis, TN 38109
Phone: 901.948.7000
Fax: 901.948.7872

5662 Leesport Avenue
Reading, PA 19605
Phone: 800.554.0554
Fax: 610.926.2897

Vossloh North America

clevelandtrack.com
vossloh-north-america.com
info@vossloh-north-america.com

vossloh
North America

Thick Web Miter Rail Bridge Joint System

N.R.P.C. U.S. Pat. No. 6,672,516

Thick Web Miter Rail Bridge Joint System

The Vossloh Thick Web Miter Rail Bridge Joint System was designed and developed along with and for AMTRAK, for use on their lift, swing and bascule movable bridges. It has a proven record of reliable performances with minimized maintenance and improved life-cycle costs.

Amtrak, Portal Bridge

Features

- **Premium head hardened thick web rail**
- **Flash-butt welded extension rails**
- **Designed for welded installations**
- **Precision machined rail cradles**
- **Heavy-duty thick base plate assemblies**
- **Approach rails are securely anchored to plating**
- **Fully guarded through the mitred section**
- **Minimized number of joints**

Benefits

- **Flash-butt welds eliminate joints & rail batter**
- **Easily adaptable to straight-railing for off-season**
- **Smoother wheel transitions – less wear**
- **No vertical wheel path discontinuities**
- **Elimination of vertical impacts**
- **Much higher tensile and yield strengths**
- **Far less initial flow than manganese designs**
- **Reduced maintenance requirements**
- **Significant improvement in life-cycle cost**

Headquarters location:

6917 Bessemer Avenue
Cleveland, OH 44127
Phone: 216.641.4000
Fax: 216.641.0882

Headquarters main mailing address:

P.O. Box 603160
Cleveland, OH 44103
Phone: 216.641.4000
Fax: 216.641.0882

Manufacturing facility locations:

6900 Bessemer Avenue
Cleveland, OH 44127
Phone: 216.641.4000
Fax: 216.641.0882

7000 Central Avenue
Cleveland, OH 44104
Phone: 216.881.8800
Fax: 216.881.6910

391 Mallory Avenue
Memphis, TN 38109
Phone: 901.948.7000
Fax: 901.948.7872

5662 Leesport Avenue
Reading, PA 19605
Phone: 800.554.0554
Fax: 610.926.2897

Vossloh North America

clevelandtrack.com
vossloh-north-america.com
info@vossloh-north-america.com

vossloh
North America

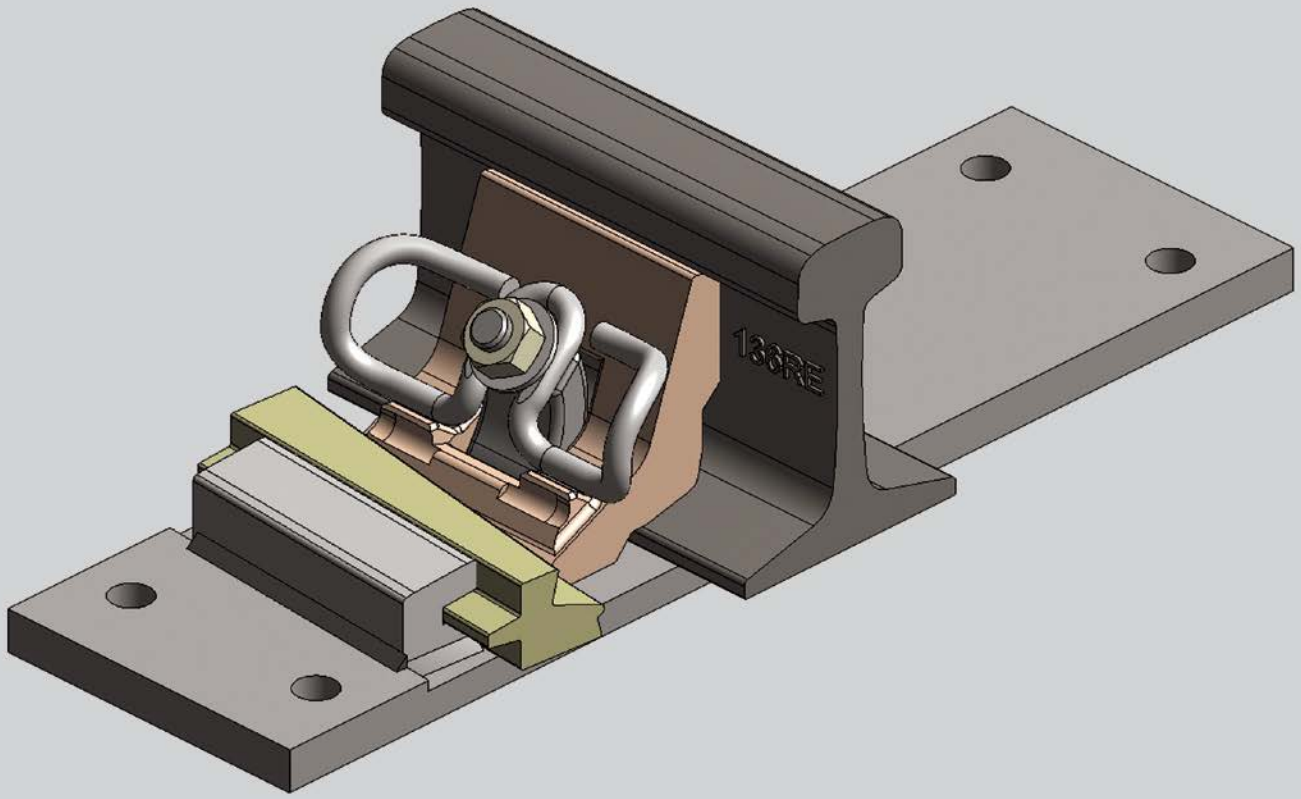

"V-RAM" Universal Rail Brace Plate System

"V-RAM" Universal Rail Brace Plate System

The new "V-RAM" brace plate system incorporates the same key design features as the Vossloh "EVR" brace system that has provided improved in-track performance and panel handling stability over other existing rail brace designs. The threaded post is centrally positioned within the brace opening, allowing the clamping force of the Vossloh Tension Clamp to be maximized. The clamp loading is applied directly to the brace, both front and back, securing the brace laterally against the stock rail and down against the rail flange and the plate.

Installation Instructions

1. Position the plate on tie with stock rail in position in the rail seat and with the rail base up against the riser.
2. Place the brace in position down over the top of the threaded post and slide the brace toward the stock rail to engage fit.
3. Insert the wedge and tap it in place to draw the brace up snugly against the stock rail, do not overdrive!
4. Place the tension clamp in position, apply the flat washer and nut to secure brace in place, and tap the wedge snug if required.
5. Apply retention pin to hole at far end of the wedge for final added security.

Features

The major benefit of the new "V-RAM" Universal Brace Plate System is that it is uniquely designed to accommodate both the mainline rail group and the secondary rail group. The rail brace and wedge are both reversible and the Universal Master Brace Plate is designed to allow installation on switches with rail sections ranging from 112RE through 141RE.

The new "V-RAM" brace design also offers some very important additional benefits over all other existing brace designs. The tension clamp itself is more effectively positioned closer to the rail and above the neutral axis of the rail increasing holding power. The new "V-RAM" brace is designed to provide the traditional "under head" and "top of rail flange" contact surfaces for both rail group positions ensuring optimum rail support. The "V-RAM" brace and wedge castings are both cast with dual rail section lettering to clearly indicate proper assembly orientation of the components providing ease of installation for both rail groups.

Patent Pending

Headquarters location:

6917 Bessemer Avenue
Cleveland, OH 44127
Phone: 216.641.4000
Fax: 216.641.0882

Headquarters main mailing address:

P.O. Box 603160
Cleveland, OH 44103
Phone: 216.641.4000
Fax: 216.641.0882

Manufacturing facility locations:

6900 Bessemer Avenue
Cleveland, OH 44127
Phone: 216.641.4000
Fax: 216.641.0882

7000 Central Avenue
Cleveland, OH 44104
Phone: 216.881.8800
Fax: 216.881.6910

391 Mallory Avenue
Memphis, TN 38109
Phone: 901.948.7000
Fax: 901.948.7872

5662 Leesport Avenue
Reading, PA 19605
Phone: 800.554.0554
Fax: 610.926.2897

Vossloh North America

clevelandtrack.com
vossloh-north-america.com
info@vossloh-north-america.com

vossloh
North America

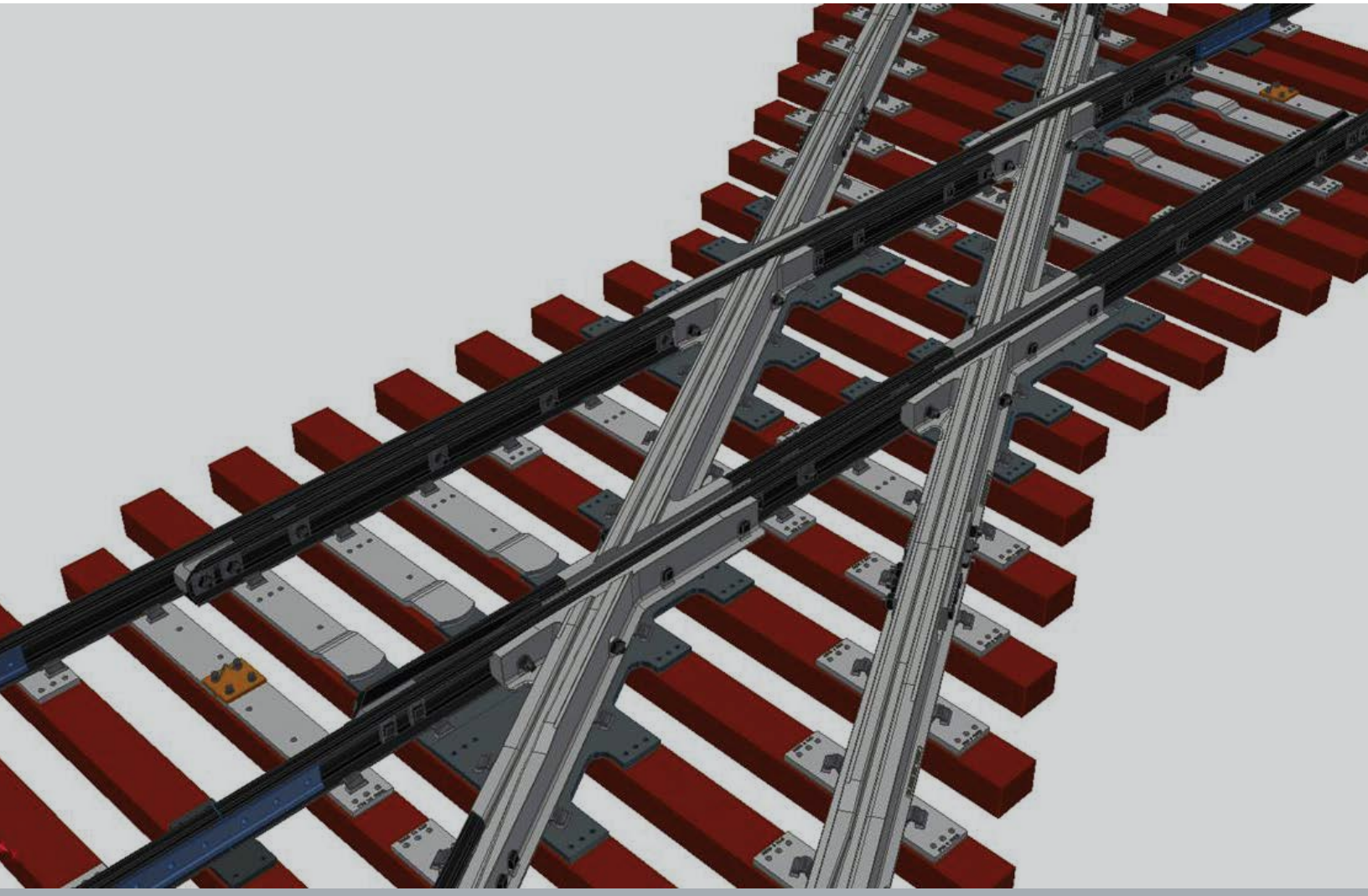

OWLS Diamond Crossings

U.S. Patent No.'s
D679,032S
D679,427S

OWLS Diamond Crossings

The **Vossloh OWLS (One Way Low Speed) Diamond Crossings** provide a major benefit of reduced maintenance along with improved performance while providing much lower life-cycle costing. The OWLS Crossings are intended for use at selected locations where one siding run has very little traffic at lower speeds (10 mph) while at the same time the other mainline run has much more traffic operating at much higher speeds on a regular basis. Wheel impacts are substantially reduced as the flanges of the wheel sets are guided up the entry ramps and allowed to pass over the tops of the mainline rails and then guided down the exit ramps when the pass-over is completed.

For optimized performance, the OWLS Diamond Crossings are typically constructed utilizing Deep Head Hardened Rail and Explosion Hardened Manganese Steel Castings. They are precisely machined to tight industry standards to provide improved performance with reduced maintenance requirements on a regular basis. They can be custom designed to meet your particular site and traffic requirements.

Headquarters location:

6917 Bessemer Avenue
Cleveland, OH 44127
Phone: 216.641.4000
Fax: 216.641.0882

Headquarters main mailing address:

P.O. Box 603160
Cleveland, OH 44103
Phone: 216.641.4000
Fax: 216.641.0882

Manufacturing facility locations:

6900 Bessemer Avenue
Cleveland, OH 44127
Phone: 216.641.4000
Fax: 216.641.0882

7000 Central Avenue
Cleveland, OH 44104
Phone: 216.881.8800
Fax: 216.881.6910

391 Mallory Avenue
Memphis, TN 38109
Phone: 901.948.7000
Fax: 901.948.7872

5662 Leesport Avenue
Reading, PA 19605
Phone: 800.554.0554
Fax: 610.926.2897

Vossloh North America

clevelandtrack.com
vossloh-north-america.com
info@vossloh-north-america.com